重载执行器Heavy-Duty Pneumatic Actuator

C 系列重载执行器

Heavy-Duty Pneumatic Actuator C- Series.

瑞 力 流 体 控 制 无 锡 有 限 公 司

Wuxi Belef Pneumatic Actuataors Co.,Ltd.

结构特点
Structrue Feature

性能特点
Performance Features

结构介绍
Construction

材质介绍
Materials

对称的技术数据
Symmetric Technical Data

倾斜的技术数据
Canted Technical Data

产品的尺寸数据
Dimension

产品型号说明:

C 1 - 02 - 30 D - 1 0 FC - SM

1 2 3 4 5 6 7 8 9

1-产品型号

Product Model

：双杆导向拨叉式

：Dual Rod Guide Stcoch Yoke

2-拨叉结构

Stcoch Yoke:

1-对称式

1-Symmetrical Type

2-倾斜式

2-Canted Type

3-箱体规格代码：02～08

Object Size Code：02 to 08

4-气缸规格(cm):

20-100

Cylinder Size(cm)：

20-100

5-作用形式:

Acting Type:

D-双作用

D-Double Action

S-单作用

S-Single Action

6-弹簧规格

Spring Specification

1：4.2Bar气源压力

1：4.2Bar Bleed Pressure

2：5.5Bar气源压力

2：5.5Bar Bleed Pressure

7-温度类型

Temperature Type

0：标准型

0：Standard Type（-20～80℃）

1：低温型

1：Low Type(-40～80℃)

2：高温型

2：High Type(-20℃～150℃)

8-气源故障位置

Air Failure Position

FO-故障开

FO-Failure to Open

FC-故障关

FC-Failure to Close

9-附件

Accessories

SM：丝杆手动

SM：Screw Manual

HM：液压手动

HM：Hydraulic Manual

结构特点
Structural Features

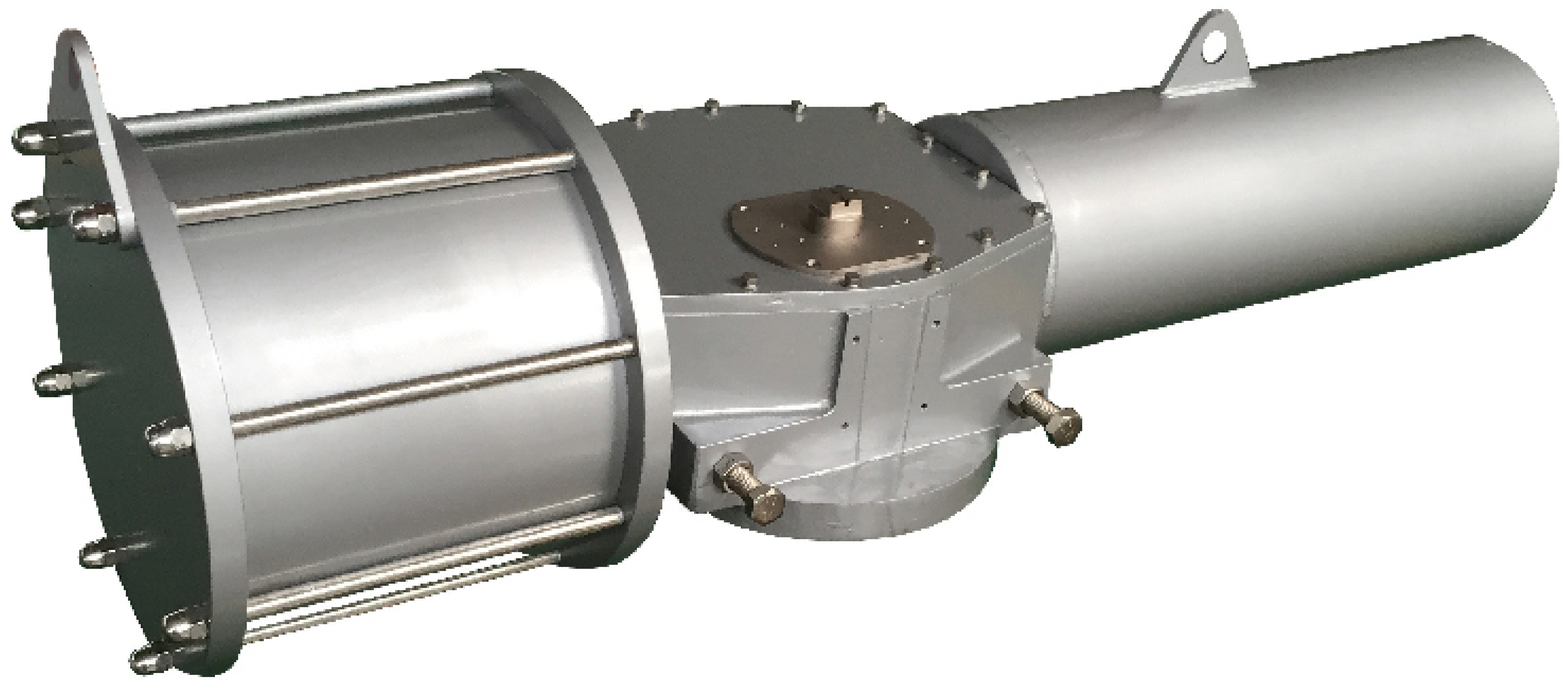

● C-系列重型执行器，通用于一般以90度旋转的阀门。例如：球阀，蝶阀，旋转阀等开关或调节流量的功能。

● C1-系列执行器是对称设计。在0度与90度时输出扭矩最大。中间位置输出扭矩最小。正对应于球阀类产生的扭矩特性。

● C2-系列执行器是采用倾斜设计，可以输出更大的起始扭矩。更符合蝶阀类的扭矩特性。

●缸体内壁采用镀硬铬工艺，保证更长的实用寿命。

● 轨道高频淬火研磨处理，滑块采用方形自润滑工艺，能保证永久的实用性。

●C-系列执行器拥有一整套安装配件包括：手动手轮，液压手动，限位开关，电磁阀，定位器及其他控制部件。

● 模块化设计和结构可提供最大化便利，在安装、维修和储存方面。

●Design and Contruction

The C series of heavy duty scotch yoke actuators is designed suitable for general purpose of valves and damper automation and offer a wide range of torques enable to operate ball , butterfly, plug valves, dampers or any device that requires a quarter-turn operation for on-off or modulating service.

● C1 series is the symmetrical design yoke that produces maximum torque at both end of the 90cycle providing travel stops.Middle output torque is minimal. In line with the series of ball valve generates torque characteristics.

● C2 series is the canted design yoke that max produces torque. More in line with butterfly valve torque characteristics.

●Using technology of plating hard chorming, which can ensure longer working life.

●Pathway high-frequency quenching grinding treatment ,sliding block using self-lubricating technology, which can ensure permanent usability.

● C series actuators come along with a complete line of controls and monitoring accessories including Manual Handwheel (jacks-rew).hydraulic overrides, limit switches,solenoid valves,positioners and other controls accessories.

●Its modular design and construction provides maximized convenience during installation,maintenance and storage.

性能特点 Performance Features

●C-系列执行器在单作用可以提供120000N.m，双作用可以提供240000N.m的扭矩输出。最大工作压力8巴。

● spring return actuator can provide 120000 n. m torque output, double acting actuator can provide 240000 n. m torque out put .The maximum working pressure is 8 bar.

●两个独立的行程调节螺栓，可以在±6℃的范围调节阀门开关位置。

●Two independent travel adjustment bolts,can be in the range of ±6℃ to regulate valve switch position.

●工作温度：低温型-40～80℃
标准型-20～80℃
高温型-20℃～150℃

●Standard Operating temperature: Low Type(-40～80℃)
Standard Type（-20～80℃）
High Type(-20℃～150℃)

●符合IP65以上的防护等级

●Comply with IP65 protection class.

模块化设计 Modular Design

能够针对不同的实用需求，选择组合动力。极大的提升了模块化的灵活性。减少维修与备货成本。

Provides maximized operational flexibility in selection and combination of power cylinder ,body and spring pack depending on project requirement. Additional benefit would be less cost for maintenance and stocking of parts.

手轮模块
Manual Handwheel

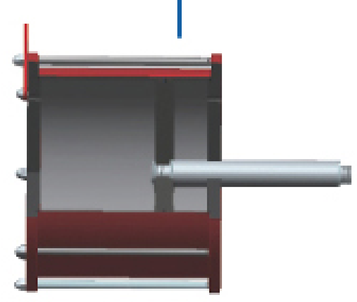

气缸
Hydraulic Cylinder

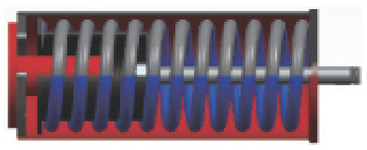

弹簧
Spring Catridge

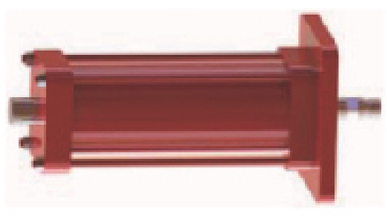

液压缸
Hydraulic Cylinder&Pump

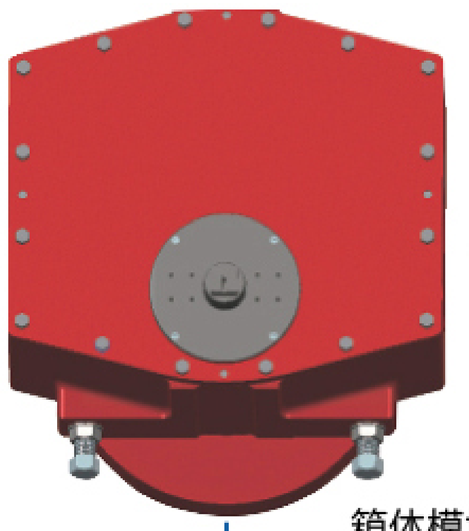

箱体模块
Center Body

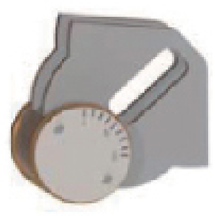

对称式
Symmetric Yorke

倾斜式
Canted Yorke

手轮模块
Manual Handwheel

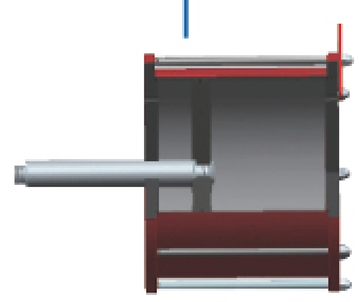

气缸
Hydraulic Cylinder

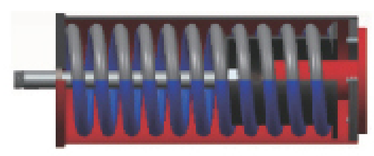

弹簧
Spring Catridge

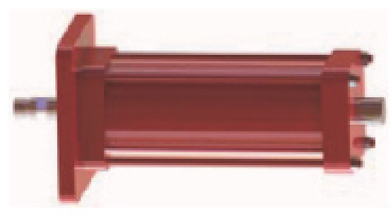

液压缸
Hydraulic Cylinder&Pump

结构介绍
Construction

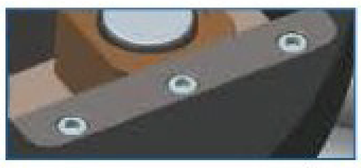

轨道采用高频淬火研磨处理，可拆卸设计，维护成本低

Orbit is treated by high frequency quenching and grinding, with knock-down design, low maintenance cost.

宽大方形活灵，大幅提高拨叉组件整体使用寿命

Large square flexible, increasing the life of the overall heavy-duty pneumatic actuator components.

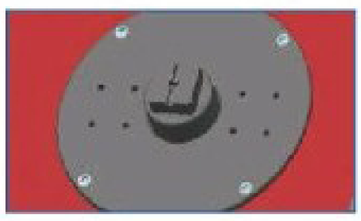

NAMUR标准尺寸，适用指示开关、定位器等配件安装

NAMUR standard size, suitable for installation of limit switch, positioner and other accessories.

双行程调节螺栓，可调节范围在±6° 以内

Double travel adjustment bolts, adjustable range is within ±6° .

整件抛丸、三底三面喷漆处理，大幅提升表漆面牢固度和整体防腐蚀性能

Whole polishing, three bottom three sides with paint treatment, which dramatically improves firmness of the painted surface and overall corrosion resistant performance.

高强度铜合金+石墨自润滑功能滑块，方形防卡死设计

High strength copper alloy, sliding block with graphite self lubricating function, square anti jamming design.

卡簧固定方式，保障零部件整体性、安全性和使用寿命

Spring fixed way, to protect the integrity, safety and service life of components.

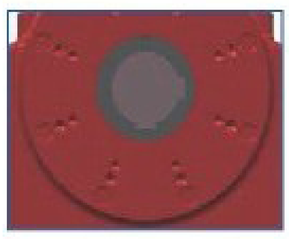

特殊加大的阀轴孔径设计，可直接安装较大规格的直径轴，无需另配联轴器和支架

Special increased valve shaft bore diameter design, can install thicker diameter shaft directly without coupler and bracket.

独创新型双杆导向结构，力矩分配更加合理

Unique new dual rod guide structure, torque distribution is more reasonable.

气缸内壁镀硬铬处理工艺，防腐耐磨，更长使用寿命

Using technology of plating hard chroming of the cylinder inner wall, it is corrosion resistant, and wearable, which can ensure longer working life.

材质介绍 Materials

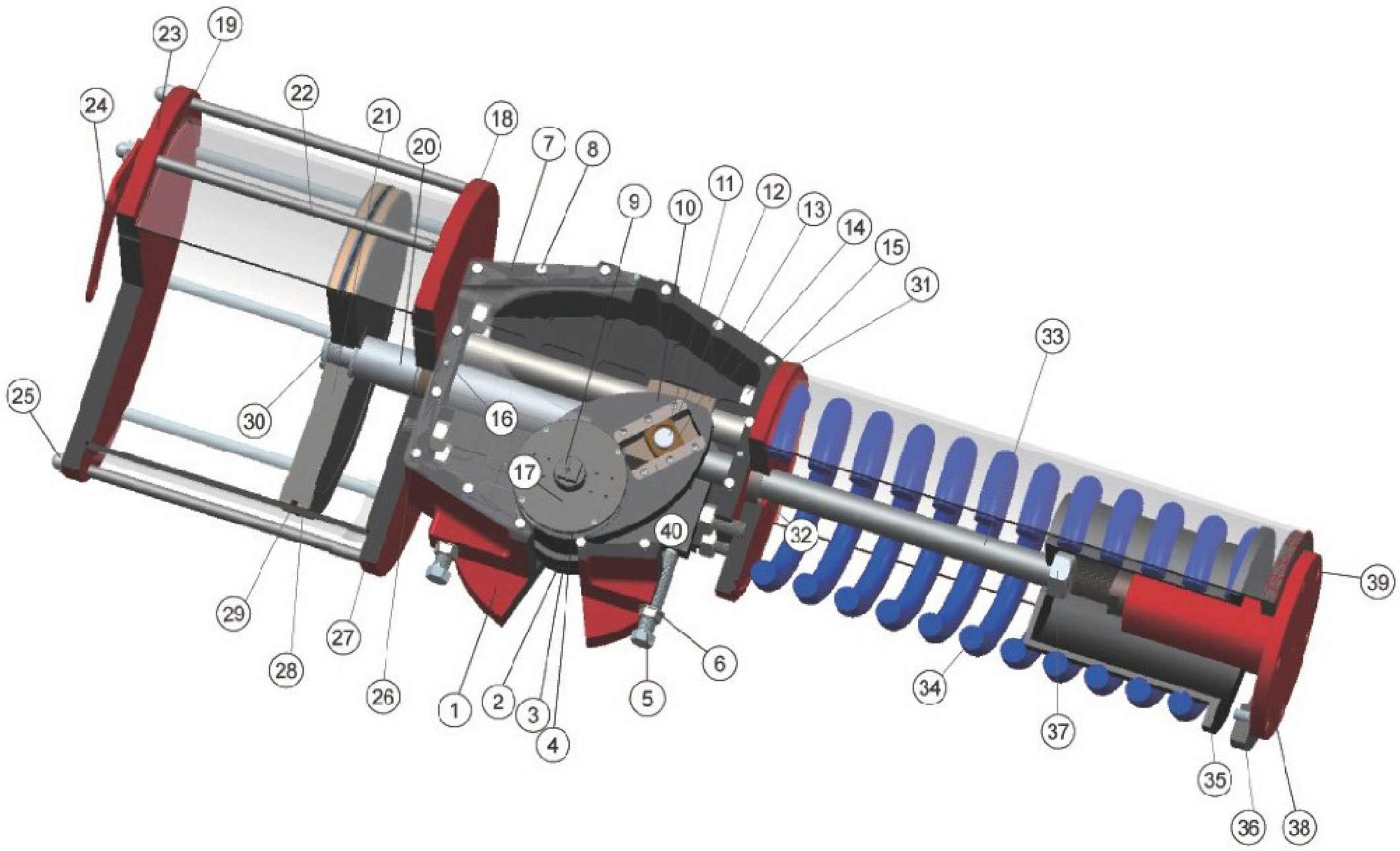

序号	类型DESCRIPTION		材质MATERIAL	
1	箱体	BODY	球墨铸铁/铝合金	Nodular Cast Iron/Aluminium Alloy
2	下轴套	Lower Bushing	低碳钢+合金铜	Low Carbon Steel+Copper Alloy
3	密封圈	Bushing O-ring	丁晴橡胶	NBR
4	上轴套	Upper Bushing	低碳钢+合金铜	Low Carbon Steel+Copper Alloy
5	调节螺栓	Adjusting Bolt	合金钢	Alloy Steel
6	调节螺母	Adjusting Nut	合金钢	Alloy Steel
7	箱盖	Body Cover	球墨铸铁/铝合金	Nodular Cast Iron/Aluminium Alloy
8	箱盖螺栓	Body Cover Bolt	不锈钢	Stainless Steel
9	指示器	Indicator	合金钢	Alloy Steel
10	拨叉	Scotch Yoke	球墨铸铁	Nodular Cast Iron
11	轴挡	Axle Bumper	合金钢	Alloy Steel
12	轴销	Axle Pin	合金钢	Alloy Steel
13	滑块	Sliding Block	合金黄铜	Alloy Brass
14	活灵	Slide Block	合金钢	Alloy Steel
15	连接螺栓	Connecting Bolts	合金钢	Alloy Steel
16	销子	Pin	合金钢	Alloy Steel
17	安装板	Mounting Plate	合金钢	Alloy Steel
18	前缸盖	Front Cylinder Cover	合金钢/铝合金	Alloy Steel/Aluminium Alloy
19	缸盖O型圈	O-Ring	丁晴橡胶	NBR
20	活塞杆	Piston Rod	合金钢	Alloy Steel

序号	类型DESCRIPTION		材质MATERIAL	
21	活塞	Piston	合金钢/铝合金	Alloy Steel/Aluminium Alloy
22	气缸拉杆	Cylinder Rod	合金钢/不锈钢	Alloy Steel/Stainless Steel
23	后缸盖	Back Cylinder Cover	合金钢/铝合金	Alloy Steel/Aluminium Alloy
24	起吊板	Lifting Plate	合金钢	Alloy Steel
25	拉杆螺母	Rod Nut	合金钢/不锈钢	Alloy Steel/Stainless Steel
26	活塞杆衬套	Piston Rod Bushing	低碳钢+合金铜	Low Carbon Steel+Copper Alloy
27	前缸盖O型圈	Front Cylinder Cover O-Rings	丁晴橡胶	NBR
28	支撑圈	Support Ring	青铜合成材料	Bronze Synthetic Material
29	活塞O型圈	Piston O-Ring	丁晴橡胶	NBR
30	活塞并紧螺母	Piston Tight Bolt	合金钢	Alloy Steel
31	弹簧箱前盖	Spring Case Front Cover	合金钢	Alloy Steel
32	弹簧杆导套	Spring Rod Guide Bushing	合金钢	Alloy Steel
33	弹簧杆	Spring Rod	合金钢	Alloy Steel
34	弹簧	Spring	弹簧钢	Spring Steel
35	弹簧导套	Spring Guide Bush	合金钢	Alloy Steel
36	弹簧筒后盖	Spring Case End Cover	合金钢	Alloy Steel
37	弹簧杆紧锁螺母	Spring Rod Tight Nut	合金钢	Alloy Steel
38	液压油缸	Hydraulic Oil Cylinder	合金钢	Alloy Steel
39	封盖螺栓	Cover Bolt	合金钢/不锈钢	Alloy Steel/Stainless Steel
40	轨道模块	Orbital Module	球墨铸铁	Nodular Cast Iron

对称的技术数据
Symmetric Technical Data

双作用输出扭矩
Double Acting Actuator

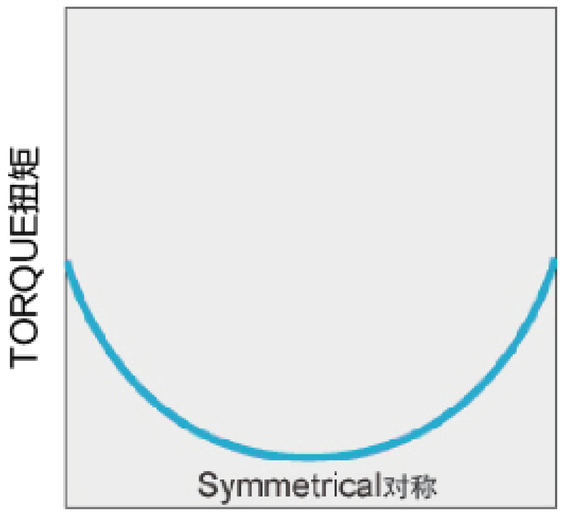

弹簧单作用输出扭矩
Spring Returna Actuator

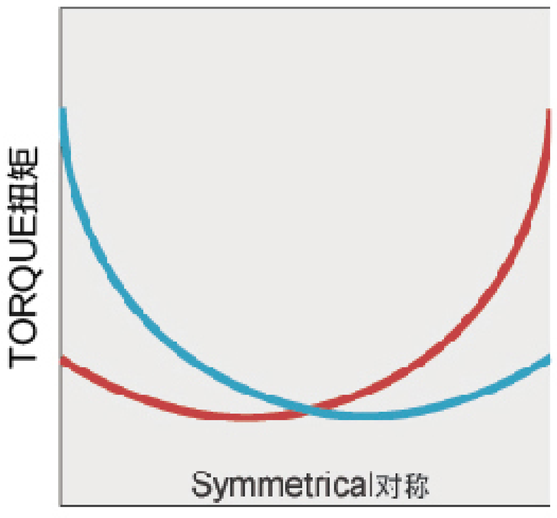

对称式
Symmetric type

扭力曲线
Torque Curve

气动扭矩 Air Torque
弹簧扭矩 Spring Torque

对称双作用Symmetric Double Action

Unit：Nm

型号 MODEL	4.0Bar			5.0Bar			6.0Bar			8.0Bar		
	0°	R	90°	0°	R	90°	0°	R	90°	0°	R	90°
C1-02-20D	1,460	908	1,403	1,827	1,135	1,755	2,193	1,362	2,106	2,924	1,816	2,807
C1-02-25D	2,284	1,419	2,226	2,855	1,773	2,783	3,426	2,128	3,339	4,568	2,837	4,452
C1-02-30D	3,289	2,043	3,231	4,111	2,554	4,039	4,934	3,064	4,847	6,578	4,086	6,462
C1-02-35D	4,477	2,781	4,419	5,596	3,476	5,524	6,715	4,171	6,628	8,954	5,561	8,838
C1-03-35D	5,419	3,366	5,262	6,774	4,208	6,577	8,129	5,049	7,893	10,839	6,732	10,524
C1-03-38D	6,388	3,968	6,231	7,985	4,960	7,788	9,582	5,952	9,346	12,777	7,936	12,461
C1-03-43D	8,180	5,081	8,022	10,225	6,351	10,028	12,270	7,621	12,034	16,360	10,162	16,045
C1-04-43D	10,492	6,517	10,217	13,115	8,146	12,772	15,738	9,775	15,326	20,984	13,033	20,435
C1-04-48D	13,074	8,120	12,799	16,342	10,150	15,999	19,610	12,180	19,199	26,147	16,241	25,599
C1-04-53D	15,939	9,900	15,665	19,924	12,375	19,581	23,909	14,850	23,497	31,878	19,800	31,330
C1-05-53D	19,586	12,165	19,143	24,483	15,207	23,928	29,379	18,248	28,714	39,173	24,331	38,285
C1-05-58D	23,456	14,569	23,013	29,320	18,211	28,766	35,184	21,584	34,519	46,912	29,138	46,025
C1-05-63D	27,675	17,189	27,231	34,593	21,486	34,039	41,512	25,784	40,847	55,349	34,378	54,462
C1-06-63D	34,546	21,457	33,682	43,182	26,821	42,102	51,818	32,185	50,523	69,091	42,914	67,364
C1-06-68D	40,247	24,998	39,383	50,308	31,247	49,228	60,370	37,497	59,074	80,493	49,996	78,766
C1-06-73D	46,383	28,809	45,519	57,978	36,011	56,899	69,574	43,124	68,278	92,765	57,618	91,038
C1-07-68D	53,628	33,104	52,468	67,035	41,380	65,585	80,442	49,656	78,702	107,256	66,208	104,936
C1-07-73D	61,804	38,151	60,645	77,255	47,688	75,806	92,706	57,226	90,967	123,608	76,302	121,290
C1-07-80D	74,225	45,818	73,066	92,781	57,272	91,332	111,337	68,727	109,599	148,450	91,636	146,132
C1-08-80D	98,968	61,092	97,097	123,710	76,365	121,371	148,452	91,638	145,645	197,936	122,184	194,194
C1-08-90D	125,257	77,319	123,385	156,571	96,648	154,231	187,885	115,978	185,077	250,514	154,638	246,770
C1-08-100D	154,638	95,456	152,767	193,297	119,320	190,958	231,957	143,184	229,150	309,276	190,912	305,534

对称的技术数据
Symmetric Technical Data

对称单作用Symmetric Single Action

Unit:Nm

型号 MODEL		弹簧扭矩 Sping Torque			气源压力Air Torque:Air Supply Pressure											
					4.0BAR			5.0BAR			6.0BAR			8.0BAR		
		0°	R	90°	0°	R	90°	0°	R	90°	0°	R	90°	0°	R	90°
C1-02-20S	A	602	495	975	858	413	428	1,225	640	780	1,591	867	1,131			
	B	790	650	1,280				1,037	485	475	1,403	712	826	2,134	1,166	1,527
C1-02-25S	A	913	751	1,479	1,371	668	747	1,942	1,022	1,304	2,513	1,377	1,860			
	B	1,239	1,019	2,007				1,616	754	776	2,187	1,409	1,332	3,329	1,818	2,445
C1-02-30S	A	1,301	1,080	2,141	1,988	963	1,090	2,810	1,474	1,898	3,633	1,984	2,706			
	B	1,787	1,469	2,894				2,324	1,085	1,145	3,147	1,595	1,953	4,791	2,617	3,568
C1-02-35S	A	1,628	1,352	2,679	2,849	1,429	1,740	3,968	2,124	2,845	5,087	2,819	3,949			
	B	2,140	1,759	3,466				3,456	1,717	2,058	4,575	2,412	3,162	6,814	3,802	5,372
C1-03-35S	A	1,803	1,539	3,098	3,616	1,827	2,164	4,971	2,669	3,479	6,326	3,510	4,795			
	B	2,566	2,120	4,189				4,208	2,088	2,388	5,563	2,929	3,704	8,273	4,612	6,335
C1-03-38S	A	2,480	2,049	4,048	3,908	1,919	2,183	5,505	2,911	3,740	7,102	3,903	5,298			
	B	3,303	2,729	5,391				4,682	2,231	2,397	6,279	3,223	3,955	9,474	5,207	7,070
C1-03-43S	A	3,049	2,519	4,977	5,131	2,562	3,045	7,176	3,832	5,051	9,221	5,102	7,057			
	B	4,097	3,554	7,223				6,128	2,797	2,805	8,173	4,067	4,811	12,263	6,608	8,822
C1-04-43S	A	4,167	3,569	7,202	6,325	2,948	3,015	8,948	4,577	5,570	11,571	6,206	8,124			
	B	5,436	4,656	9,395				7,679	3,490	3,377	10,302	5,119	5,931	15,548	8,377	11,040
C1-04-48S	A	5,125	4,390	8,857	7,949	3,730	3,942	11,217	5,760	7,142	14,485	7,790	10,342			
	B	6,406	5,582	11,372				9,936	4,568	4,627	13,204	6,598	7,827	19,741	10,659	14,227
C1-04-53S	A	6,214	5,323	10,745	9,275	4,577	4,920	13,710	7,052	8,836	17,695	9,527	12,752			
	B	8,236	7,054	14,234				11,688	5,321	5,347	15,673	7,796	9,263	23,642	12,746	17,096
C1-05-53S	A	7,651	6,505	13,070	11,935	5,660	6,073	16,832	8,702	10,858	21,728	11,743	15,644			
	B	10,204	8,675	17,431				14,279	6,532	6,497	19,175	9,573	11,283	28,969	15,656	20,854
C1-05-58S	A	9,296	7,733	15,538	14,160	6,836	7,475	20,024	10,478	13,228	25,888	14,121	18,981			
	B	12,124	10,308	20,710				17,196	7,903	8,056	23,060	11,546	13,809	34,788	18,830	25,315
C1-05-63S	A	10,971	9,328	18,742	16,704	7,861	8,489	23,622	12,158	15,297	30,541	16,456	22,105			
	B	14,127	12,010	24,132				20,466	9,476	9,907	27,385	13,774	16,715	41,222	22,368	30,330
C1-06-63S	A	13,456	11,608	23,515	21,090	9,849	10,167	29,726	15,213	18,587	38,362	20,577	27,008			
	B	17,092	14,744	29,869				26,090	12,077	12,233	34,726	17,441	20,654	51,999	28,170	37,495
C1-06-68S	A	15,243	13,149	26,637	25,004	11,849	12,746	35,065	18,098	22,591	45,127	24,348	32,437			
	B	20,474	17,662	35,779				29,834	13,585	13,449	39,896	19,835	23,295	60,019	32,334	42,987
C1-06-73S	A	17,816	15,368	31,314	28,567	13,441	14,385	40,162	20,643	25,765	51,758	27,846	37,144			
	B	23,159	19,978	40,471				34,819	16,033	16,428	46,415	23,236	27,807	69,606	37,640	50,567
C1-07-68S	A	20,914	17,545	36,467	32,714	15,559	16,001	46,121	23,835	29,118	59,528	32,111	42,235			
	B	26,143	21,931	45,583				40,892	19,449	20,002	54,299	27,725	33,119	81,113	44,277	59,353
C1-07-73S	A	24,103	20,220	42,026	37,701	17,931	18,619	53,152	27,468	33,780	68,603	37,006	48,941			
	B	30,129	25,274	52,533				47,126	22,414	23,273	62,577	31,952	38,434	93,479	51,028	68,757
C1-07-80S	A	28,947	24,283	50,473	45,278	21,535	22,593	63,834	32,989	40,859	82,390	44,444	59,126			
	B	36,184	30,354	63,091				56,597	26,918	28,241	75,153	38,373	46,508	112,266	61,282	83,041
C1-08-80S	A	38,597	32,378	67,298	60,371	28,714	29,799	85,113	43,987	54,073	109,855	59,260	78,347			
	B	48,246	40,473	84,122				75464	35,892	37,249	100,206	51,165	61,523	149,690	81,711	110,072
C1-08-90S	A	48,850	40,979	85,174	76,407	36,340	38,211	107,721	55,669	69,057	139,035	74,999	99,903			
	B	61,062	51,223	106,468				95,509	45,425	47,763	126,823	64,755	78,609	189,452	103,415	140,302
C1-08-100S	A	60,308	50,591	105,153	94,330	44,865	47,614	132,989	68,729	85,805	171,649	92,593	123,997			
	B	75,385	63,239	131,441				117,912	56,081	59,517	156,572	79,945	97,709	233,891	127,673	174,093

倾斜的技术数据
Canted Technical Data

双作用输出扭矩
Double Acting Actuator

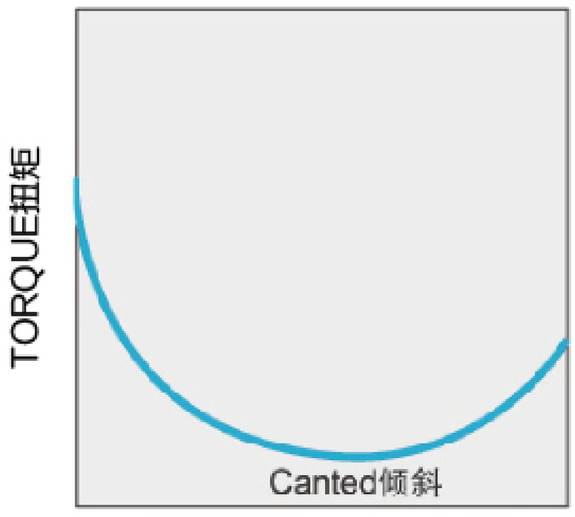

弹簧单作用输出扭矩
Spring Returna Actuator

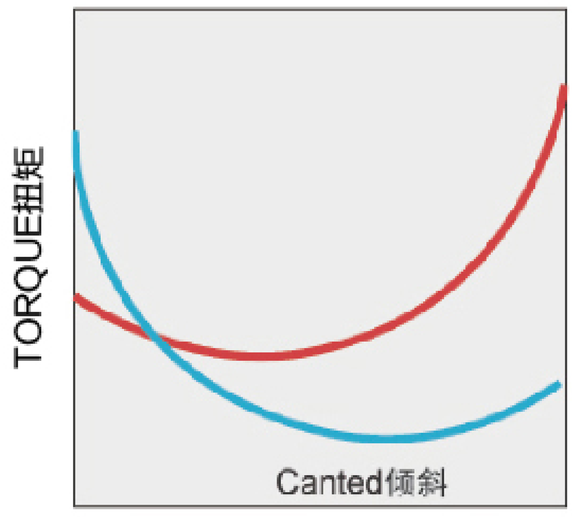

倾斜式
Canted Type

扭力曲线
Torque Curve Air

气动扭矩 Torque Curve Air Torque
弹簧扭矩 Spring Torque

倾斜双作用Canted Double Action

Unit：Nm

型号 MODEL	4.0BAR			5.0BAR			6.0BAR			8.0BAR		
	0°	R	90°	0°	R	90°	0°	R	90°	0°	R	90°
C2-02-20D	1,836	908	1,279	2,295	1,135	1,599	2,754	1,362	1,919	3,672	1,816	2,559
C2-02-25D	2,869	1,419	1,999	3,586	1,773	2,499	4,303	2,128	2,998	5,737	2,837	3,998
C2-02-30D	4,131	2,043	2,879	5,164	2,554	3,598	6,196	3,064	4,318	8,262	4,086	5,757
C2-02-35D	5,623	2,781	3,918	7,028	3,476	4,898	8,434	4,171	5,877	11,245	5,561	7,836
C2-03-35D	6,806	3,366	4,743	8,508	4,208	5,929	10,209	5,049	7,114	13,613	6,732	9,486
C2-03-38D	8,023	3,968	5,591	10,029	4,960	6,988	12,035	5,952	8,386	16,046	7,936	11,182
C2-03-43D	10,273	5,081	7,159	12,842	6,351	8,949	15,410	7,621	10,738	20,547	10,162	14,318
C2-04-43D	13,177	6,517	9,182	16,471	8,146	11,477	19,765	9,775	13,773	26,353	13,033	18,364
C2-04-48D	16,419	8,120	11,441	20,524	10,150	14,302	24,629	12,180	17,162	32,838	16,241	22,883
C2-04-53D	20,018	9,900	13,959	25,023	12,375	17,347	30,027	14,850	20,924	40,036	19,800	27,899
C2-05-53D	24,598	12,165	17,141	30,748	15,207	21,426	36,898	18,248	25,712	49,197	24,331	34,282
C2-05-58D	29,459	14,569	20,528	36,823	18,211	25,660	44,188	21,854	30,792	58,917	29,138	41,055
C2-05-63D	34,757	17,189	24,220	43,446	21,486	30,274	52,135	25,784	36,329	69,513	31,378	54,462
C2-06-63D	43,386	21,457	30,233	54,332	26,821	37,791	65,079	32,185	45,349	86,771	42,914	60,465
C2-06-68D	50,546	24,998	35,222	63,182	31,247	44,027	75,818	37,497	52,833	101,091	49,996	70,444
C2-06-73D	58,252	28,809	40,592	72,815	36,011	50,740	87,378	43,214	60,888	116,504	57,618	81,184
C2-07-68D	67,035	33,104	46,696	83,793	41,380	58,370	100,552	49,656	70,044	134,070	66,208	93,392
C2-07-73D	77,255	38,151	53,974	96,568	47,688	67,467	115,882	57,226	80,961	154,510	76,302	107,948
C2-07-80D	92,781	45,818	65,028	115,976	57,272	81,285	139,171	68,727	97,542	185,562	91,636	130,056
C2-08-80D	123,710	61,092	86,416	154,637	76,365	108,020	185,565	91,638	129,624	247,420	122,184	172,832
C2-08-90D	156,571	77,319	109,812	195,713	96,648	137,265	234,856	115,978	164,718	313,142	154,638	219,624
C2-08-100D	193,297	95,456	135,962	241,621	119,320	169,952	289,945	143,184	203,943	386,594	190,912	271,924

倾斜的技术数据
Canted Technical Data

倾斜单作用Canted Single Action

Unit:Nm

型号 MODEL		弹簧扭矩 Sping Torque			气源压力Air Torque:Air Supply Pressure											
					4.0BAR			5.0BAR			6.0BAR			8.0BAR		
		0°	R	90°	0°	R	90°	0°	R	90°	0°	R	90°	0°	R	90°
C2-02-20S	A	670	452	808	1,166	456	471	1,625	683	791	2,084	910	1,111			
	B	876	591	1,056				1,419	544	543	1,878	771	863	2,796	1,225	1,503
C2-02-25S	A	1,063	717	1,282	1,806	702	717	2,523	1,056	1,217	3,240	1,411	1,716			
	B	1,396	942	1,683				2,190	831	816	2,907	1,186	1,315	4,341	1,895	2,315
C2-02-30S	A	1,496	1,020	1,834	2,635	1,023	1,045	3,668	1,534	1,764	4,700	2,044	2,484			
	B	2,059	1,404	2,524				3,105	1,150	1,704	4,137	1,660	1,794	6,203	2,682	3,233
C2-02-35S	A	1,807	1,262	2,299	3,816	1,519	1,619	5,221	2,214	2,599	6,627	2,909	3,578			
	B	2,543	1,735	3,118				4,485	1,741	1,780	5,891	2,436	2,759	8,702	3,826	4,718
C2-03-35S	A	2,047	1,464	2,700	4,759	1,902	2,043	6,461	2,744	3,229	8,162	3,585	4,414			
	B	3,093	2,098	3,759				5,415	2,110	2,170	7,116	2,951	3,355	10,520	4,634	5,727
C2-03-38S	A	2,759	1,973	3,641	5,264	1,995	1,950	7,270	2,987	3,347	9,276	3,979	4,745			
	B	3,913	2,654	4,757				6,116	2,306	2,231	8,122	3,298	3,629	12,133	5,282	6,425
C2-03-43S	A	3,637	2,467	4,421	6,636	2,614	2,738	9,205	3,884	4,528	11,773	5,154	6,317			
	B	5,017	3,403	6,099				7,825	2,948	2,850	10,393	4,218	4,639	15,530	6,759	8,219
C2-04-43S	A	4,735	3,340	6,118	8,442	3,177	3,064	11,736	4,806	5,359	15,030	6,435	7,655			
	B	6,098	4,301	7,878				10,373	3,845	3,599	13,667	5,474	5,895	20,255	8,732	10,486
C2-04-48S	A	5,887	4,152	7,605	10,532	3,968	3,836	14,637	5,998	6,697	18,742	8,028	9,557			
	B	7,754	5,469	10,017				12,770	4,681	4,285	16,875	6,711	7,145	25,084	10,772	12,866
C2-04-53S	A	7,035	4,962	9,088	12,983	4,938	4,861	17,988	7,413	8,349	22,992	9,888	11,836			
	B	9,217	6,502	11,908				15,806	5,873	5,529	20,810	8,348	9,016	30,819	13,298	15,991
C2-05-53S	A	8,854	6,189	11,286	15,744	5,976	5,855	21,894	9,018	10,140	28,044	12,059	14,426			
	B	11,770	8,235	15,018				18,978	6,972	6,408	25,128	10,013	10,694	37,427	16,096	19,264
C2-05-58S	A	10,195	7,133	13,008	19,264	7,436	7,520	26,628	11,078	12,652	33,993	14,721	17,784			
	B	14,355	10,044	18,316				22,468	8,167	7,344	29,833	11,810	12,476	44,562	19,094	22,739
C2-05-63S	A	12,292	8,601	15,684	22,465	8,588	8,536	31,154	12,885	14,590	39,843	17,183	20,645			
	B	16,158	11,306	20,617				27,288	10,180	9,657	35,977	14,478	15,712	53,355	23,072	27,822
C2-06-63S	A	14,480	10,292	18,928	28,906	11,165	11,305	39,752	16,529	18,863	50,599	21,893	26,421			
	B	18,967	14,028	26,335				35,265	12,793	11,456	46,112	18,157	19,014	67,804	28,886	34,130
C2-06-68S	A	17,715	12,591	23,156	32,831	12,407	12,066	45,467	18,656	20,871	58,103	24,906	29,677			
	B	22,115	16,357	30,708				41,067	14,890	13,319	53,703	21,140	22,125	78,976	33,639	39,736
C2-06-73S	A	19,992	14,209	26,132	38,260	14,600	14,460	52,823	21,802	24,608	67,386	29,005	34,756			
	B	25,029	18,512	34,753				47,786	17,499	15,987	62,349	24,702	26,135	91,475	39,106	46,431
C2-07-68S	A	23,423	16,141	32,090	43,612	16,963	14,606	60,370	25,239	26,280	77,129	33,515	37,954			
	B	29,280	20,176	40,113				54,513	21,204	18,257	71,272	29,480	29,931	104,790	46,032	53,279
C2-07-73S	A	26,995	18,602	36,982	50,260	19,549	16,992	69,573	29,086	30,485	88,887	38,624	43,979			
	B	33,744	23,252	46,229				62,824	24,436	21,238	82,138	33,974	34,732	120,766	53,050	61,719
C2-07-80S	A	32,420	22,340	44,416	60,361	23,478	20,612	83,556	34,932	36,869	106,751	46,387	53,126			
	B	40,526	27,925	55,520				75,450	29,347	25,765	98,645	40,802	42,022	145,036	63,711	74,536
C2-08-80S	A	43,228	29,787	59,222	80,482	31,305	27,194	111,409	46,578	48,798	142,337	61,851	70,402			
	B	54,035	37,235	74,027				100,602	39,130	33,993	131,530	54,403	55,597	193,385	84,949	98,805
C2-08-90S	A	54,712	37,700	74,953	101,859	39,619	34,859	141,001	58,948	62,312	180,144	78,278	89,765			
	B	68,389	47,125	93,691				127,324	49,523	43,574	166,467	68,853	71,027	244,753	107,513	125,933
C2-08-100S	A	67,544	47,049	92,534	125,753	48,407	43,428	174,077	72,271	77,418	222,401	96,135	111,409			
	B	84,431	58,812	115,668				157,190	60,508	54,284	205,514	84,372	88,275	302,163	132,100	156,256

产品的尺寸数据 Dimension

对称
SYMMETRIC

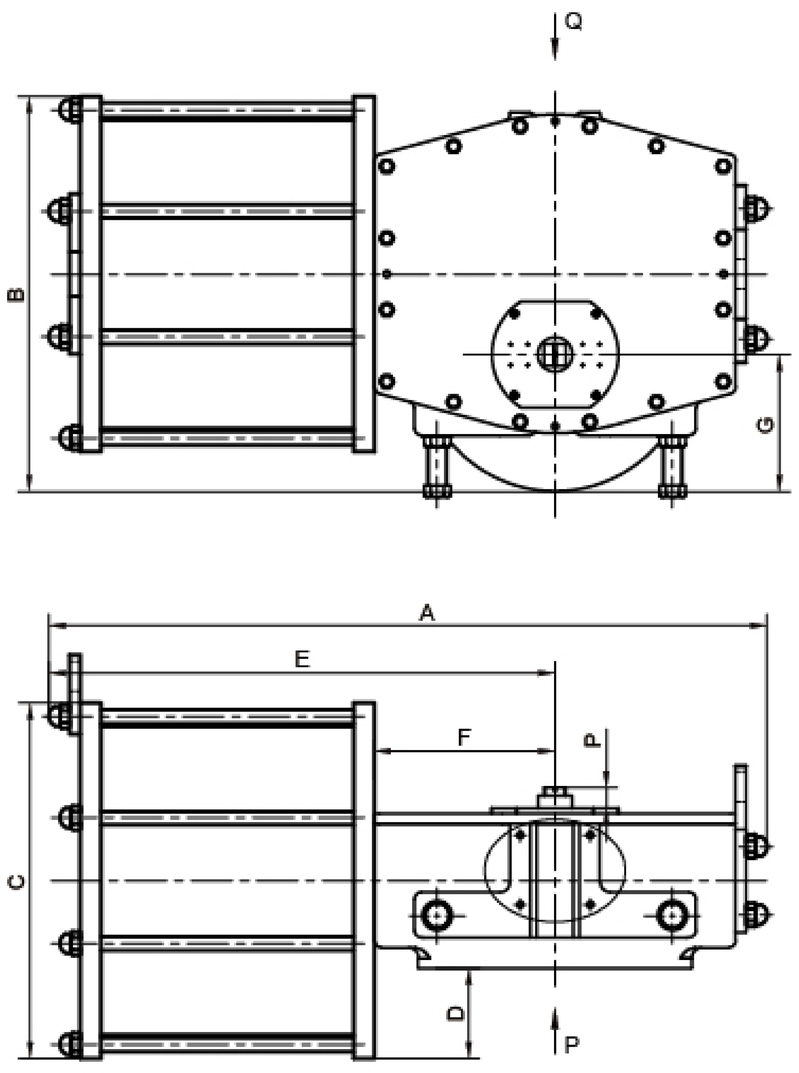

倾斜
CANTED

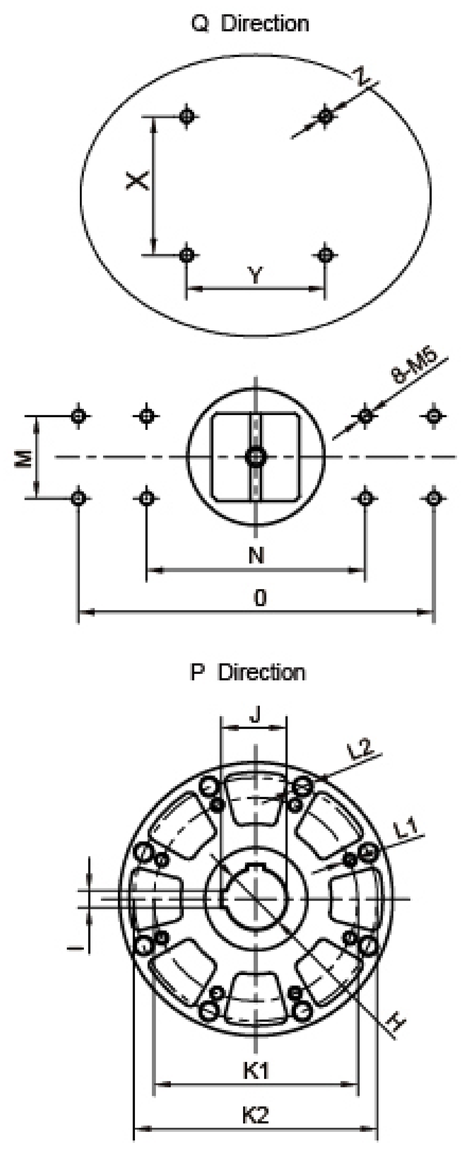

双作用
DOUBLE ACTION

对称和倾斜的数据Symmetric and Canted Data

型号 MODEL	A	A1		B	C	D	E	F	G	H	I	J
		4.2Bar	5.5Bar									
C-02-20	720	1240	1255	311	Φ270	42	510	175	100	Φ50	14	53.8
C-02-25	720	1255	1285	336	Φ320	67	510	175	100	Φ50	14	53.8
C-02-30	720	1315	1325	361	Φ370	92	510	175	100	Φ50	14	53.8
C-02-35	720	1355	1370	386	Φ420	117	510	175	100	Φ50	14	53.8
C-03-35	840	1545	1550	467	Φ420	100	585	210	165	Φ80	20	84.9
C-03-38	840	1560	1615	482	Φ450	115	585	210	165	Φ80	20	84.9
C-03-43	840	1600	1665	507	Φ500	140	585	210	165	Φ80	20	84.9
C-04-43	1045	1895	1920	573	Φ510	127	735	264	200	Φ90	25	95.4
C-04-48	1045	1935	2070	598	Φ560	152	735	264	200	Φ90	25	95.4
C-04-53	1045	2045	1980	623	Φ610	177	735	264	200	Φ90	25	95.4
C-05-53	1365	2405	2475	680	Φ610	148	930	385	230	Φ120	32	127.4
C-05-58	1365	2405	2555	710	Φ670	178	930	385	230	Φ120	32	127.4
C-05-63	1365	2535	2645	735	Φ720	203	930	385	230	Φ120	32	127.4
C-06-63	1575	2980	3025	815	Φ720	160	1075	440	275	Φ150	36	158.4
C-06-68	1575	3030	3100	850	Φ790	195	1075	440	275	Φ150	36	158.4
C-06-73	1575	3110	3190	875	Φ840	220	1075	440	275	Φ150	36	158.4
C-07-68	1915	3490	3510	910	Φ790	145	1335	520	275	Φ190	45	200.4
C-07-73	1915	3520	3560	935	Φ840	170	1335	520	275	Φ190	45	200.4
C-07-80	1915	3565	3595	975	Φ920	210	1335	520	275	Φ190	45	200.4
C-08-80	2400	4250	4300	1115	Φ920	140	1680	650	335	Φ250	56	262.4
C-08-90	2400	4380	4420	1170	Φ1030	195	1680	650	335	Φ250	56	262.4
C-08-100	2400	4480	4550	1220	Φ1130	245	1680	650	335	Φ250	56	262.4

本数据仅供参考，如有更改，恕不另行通知！This data is for reference only, subject to change without notice!

产品的尺寸数据
Dimension

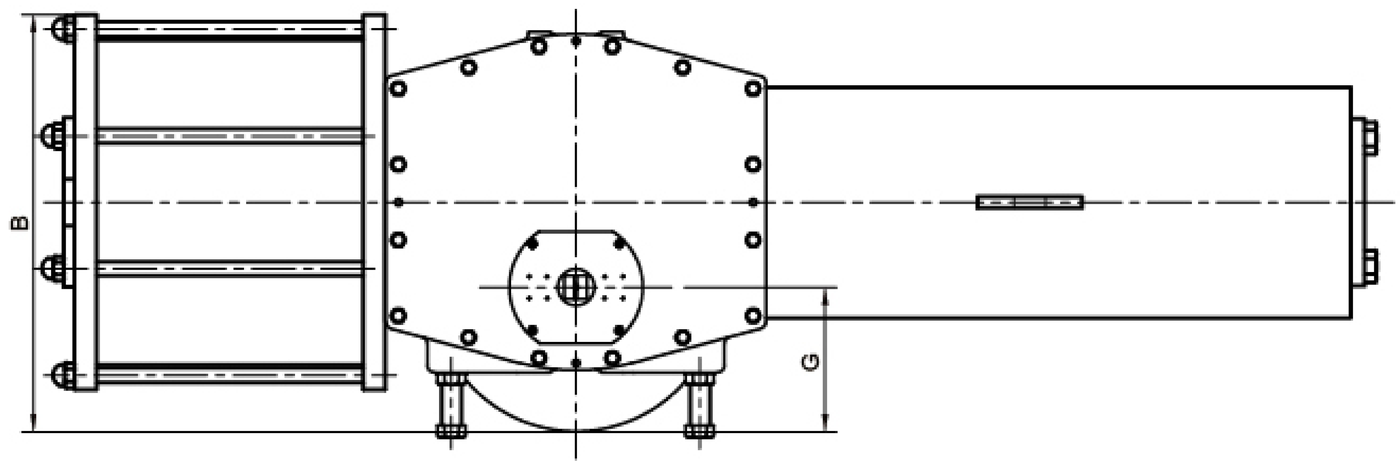

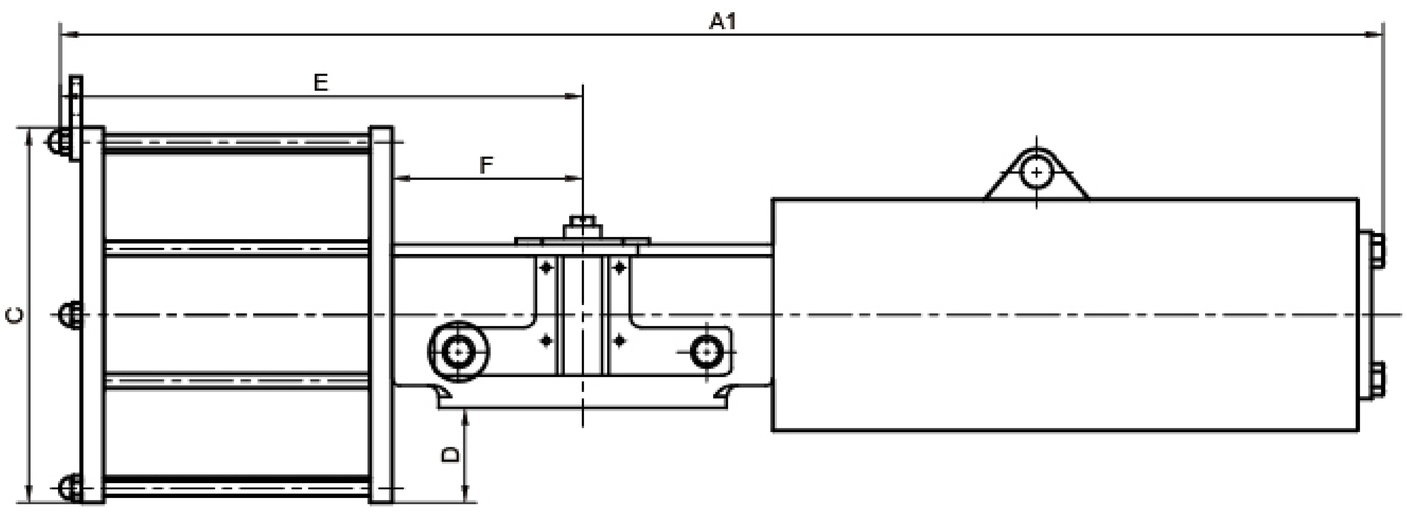

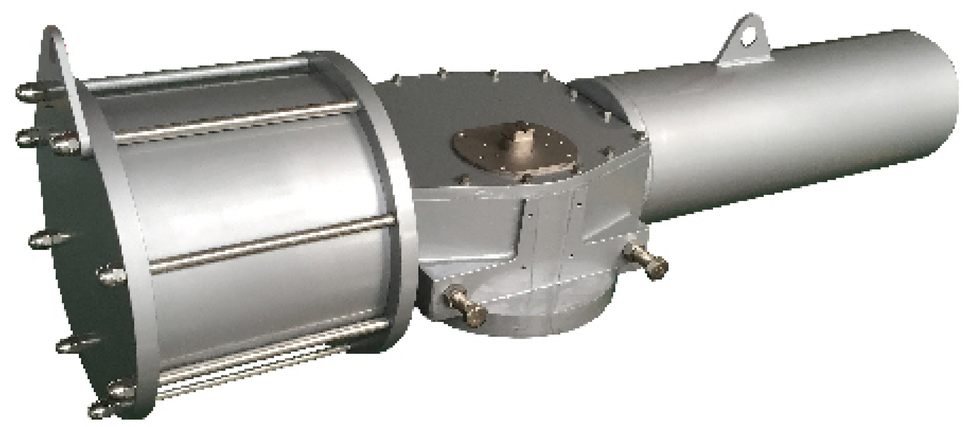

单作用
SPRING ACTING

K1	K2	L1	L2	M	N	O	P	X	Y	Z	Air Connection 气源接口
Φ165		4-M20		30	80	130	30	80	80	4-M8	RC 3/8"
Φ165		4-M20		30	80	130	30	80	80	4-M8	RC 1/2"
Φ165		4-M20		30	80	130	30	80	80	4-M8	RC 1/2"
Φ165		4-M20		30	80	130	30	80	80	4-M8	RC 1/2"
Φ254	Φ298	8-M16	8-M20	30	80	130	30	80	80	4-M8	RC 3/4"
Φ254	Φ298	8-M16	8-M20	30	80	130	30	80	80	4-M8	RC 3/4"
Φ254	Φ298	8-M16	8-M20	30	80	130	30	80	80	4-M8	RC 3/4"
Φ298	Φ356	8-M20	8-M30	30	80	130	30	100	100	4-M10	RC 1"
Φ298	Φ356	8-M20	8-M30	30	80	130	30	100	100	4-M10	RC 1"
Φ298	Φ356	8-M20	8-M30	30	80	130	30	100	100	4-M10	RC 1"
Φ298	Φ356	8-M20	8-M30	30	80	130	30	140	160	4-M12	RC 1"
Φ298	Φ356	8-M20	8-M30	30	80	130	30	140	160	4-M12	RC 1"
Φ298	Φ356	8-M20	8-M30	30	80	130	30	140	160	4-M12	RC 1"
Φ406	Φ483	8-M36	12-M36	30	80	130	30	160	160	4-M12	RC 1 1/4"
Φ406	Φ483	8-M36	12-M36	30	80	130	30	160	160	4-M12	RC 1 1/4"
Φ406	Φ483	8-M36	12-M36	30	80	130	30	160	160	4-M12	RC 1 1/4"
Φ406	Φ483	8-M36	12-M36	30	80	130	30	180	180	4-M16	RC 1 1/4"
Φ406	Φ483	8-M36	12-M36	30	80	130	30	180	180	4-M16	RC 1 1/4"
Φ406	Φ483	8-M36	12-M36	30	80	130	30	180	180	4-M16	RC 1 1/4"
Φ483	Φ603	12-M36	20-M36	30	80	130	30	200	200	4-M16	RC 1 1/2"
Φ483	Φ603	12-M36	20-M36	30	80	130	30	200	200	4-M16	RC 1 1/2"
Φ483	Φ603	12-M36	20-M36	30	80	130	30	200	200	4-M16	RC 1 1/2"

本数据仅供参考，如有更改，恕不另行通知！This data is for reference only, subject to change without notice!

产品展示
Product Show

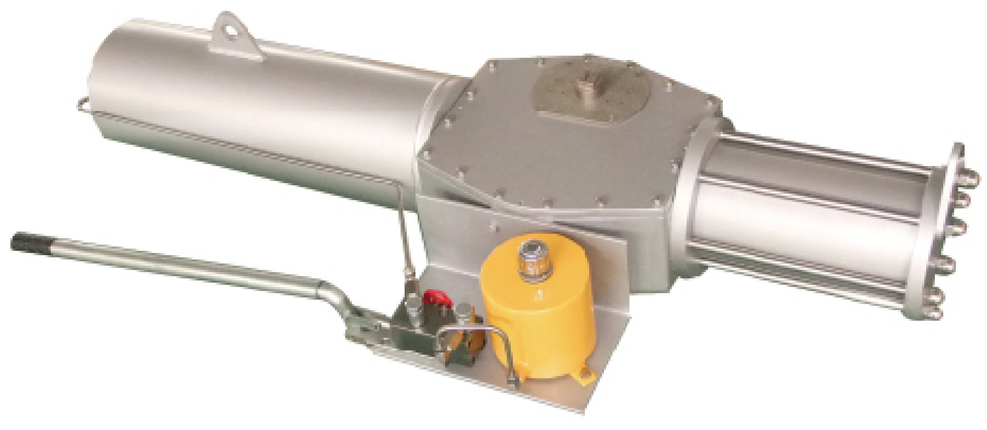

单作用液动执行器+液压手动模块
Spring return hydraulic actuator+ Hydraulic manual module

产品型号：SR系列
结构形式：对称拨叉式 倾斜拨叉式
工作压力：16MPa
缸径尺寸：非标定制
输出扭矩：600～96180N.m 超出可定制
行程范围：0～90° ±5°
箱体材质：球磨铸铁、铝合金
手动装置：液压手动、丝杆手动
工作温度：标准型：-20℃～80℃
低温型：-40℃～80℃
高温型：-20℃～150℃
附件选配：电磁阀、定位器、限位开关
减压阀、气控阀、快排阀、气锁阀等

Model: SR Series
Structure type: Symmetric Yoke Scotch Type, Canted Yoke Scotch Type
Working Pressure:16MPa
Cylinder Diameter: Non standard customization
Output torque: 600～96180N.m can be customized
Stroke range: 0～90° ±5°
Body material:SG Iron、aluminium alloy
Manual device:Hydraulic Manual、Screw Manual
Working temperature: Standard： -20℃～80℃
Low temperature：-40℃～80℃
High temperature：-20℃～150℃
Optional accessories: solenoid valve, positioner, limit switch,
pressure relief valve, air operated valve,
Fast drain valve, Lock up valve and so on.

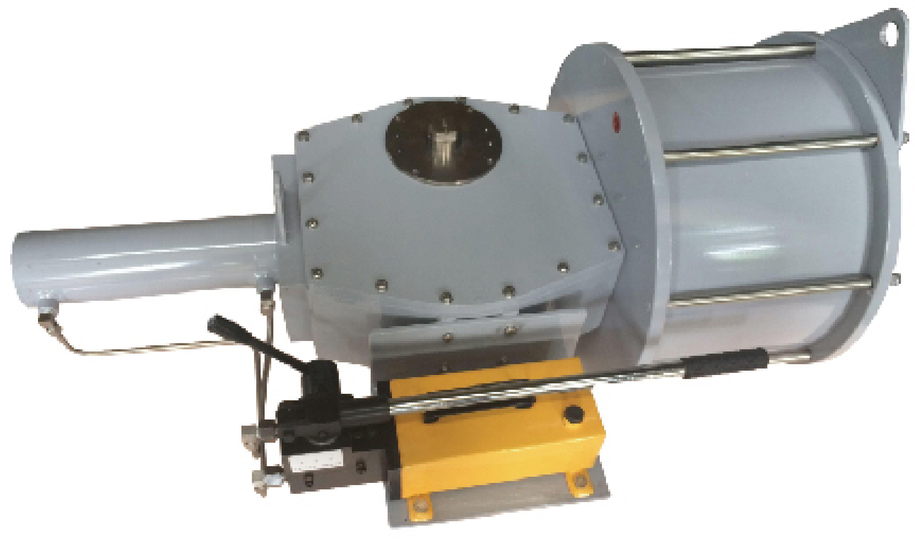

双作用气动执行器+液压手动模块
double acting pneumatic actuator + Hydraulic manual module

产品型号：DA系列
结构形式：对称拨叉式 倾斜拨叉式
工作气压：3～6Bar
缸径尺寸：200～1000mm 可定制
输出扭矩：600～229000N.m 超出可定制
行程范围：0～90° ±5°
箱体材质：球磨铸铁、铝合金
手动装置：液压手动、丝杆手动
工作温度：标准型：-20℃～80℃
低温型：-40℃～80℃
高温型：-20℃～150℃
附件选配：电磁阀、定位器、限位开关
减压阀、气控阀、快排阀、气锁阀等

Model: DA Series
Structure type: Symmetric Yoke Scotch Type, Canted Yoke Scotch Type
working air pressure:3～6Bar
Cylinder Diameter:200～1000mm can be customized
Output torque: 600～229000N.m can be customized
Stroke range: 0～90° ±5°
Body material:SG Iron、aluminium alloy
Manual device:Hydraulic Manual、Screw Manual
Working temperature: Standard： -20℃～80℃
Low temperature：-40℃～80℃
High temperature：-20℃～150℃
Optional accessories: solenoid valve, positioner, limit switch,
pressure relief valve, air operated valve,
Fast drain valve, Lock up valve and so on.

产品展示
Product Show

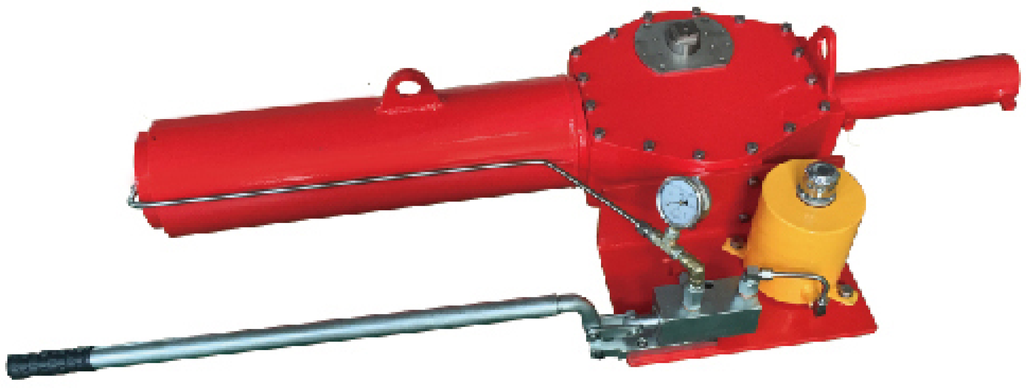

单作用高压液动执行器+液压手动模块
high pressurespring return hydraulic actuator + Hydraulic manual module

产品型号：SR系列
结构形式：对称拨叉式 倾斜拨叉式
工作压力：32MPa
缸径尺寸：非标定制
输出扭矩：600～96180N.m 超出可定制
行程范围：0～90° ±5°
箱体材质：球磨铸铁、铝合金
手动装置：液压手动、丝杆手动
工作温度：标准型：-20℃～80℃
低温型：-40℃～80℃
高温型：-20℃～150℃
附件选配：电磁阀、定位器、限位开关
减压阀、气控阀、快排阀、气锁阀等

Model: SR Series
Structure type: Symmetric Yoke Scotch Type, Canted Yoke Scotch Type
Working Pressure:32MPa
Cylinder Diameter:Non standard customization
Output torque: 600～96180N.m can be customized
Stroke range: 0～90° ±5°
Body material:SG Iron、aluminium alloy
Manual device:Hydraulic Manual、Screw Manual
Working temperature: Standard： -20℃～80℃
Low temperature：-40℃～80℃
High temperature：-20℃～150℃
Optional accessories: solenoid valve, positioner, limit switch,
pressure relief valve, air operated valve,
Fast drain valve, Lock up valve and so on.

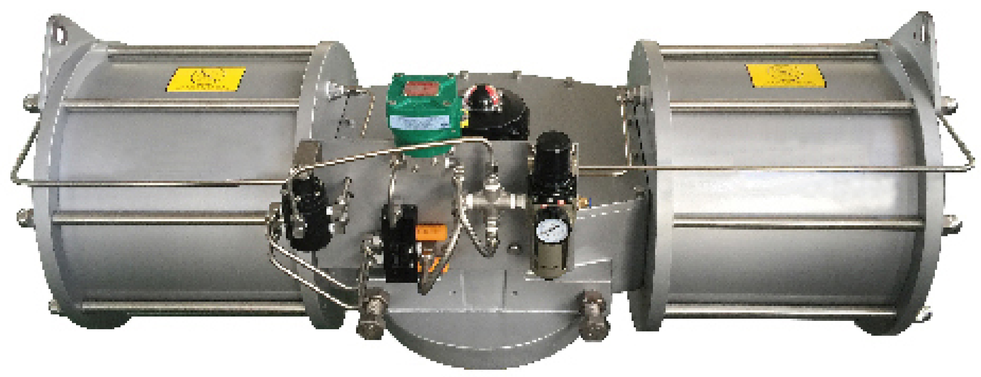

非标双作用气动执行器+附件
Non standard structure double return pneumatic actuator+accessories

产品型号：DDA系列
结构形式：对称拨叉式 倾斜拨叉式
工作气压：3～6Bar
缸径尺寸：200～1000mm
输出扭矩：600～460000N.m
行程范围：0～90° ±5°
箱体材质：球磨铸铁、铝合金
手动装置：液压手动、丝杆手动
工作温度：标准型：-20℃～80℃
低温型：-40℃～80℃
高温型：-20℃～150℃
附件选配：电磁阀、定位器、限位开关
减压阀、气控阀、快排阀、气锁阀等

Model: DDA Series
Structure type: Symmetric Yoke Scotch Type, Canted Yoke Scotch Type
working air pressure：3～6Bar
Cylinder Diameter:200～1000mm can be customized
Output torque: 600～460000N.m can be customized
Stroke range: 0～90° ±5°
Body material:SG Iron、aluminium alloy
Manual device:Hydraulic Manual、Screw Manual
Working temperature: Standard： -20℃～80℃
Low temperature：-40℃～80℃
High temperature：-20℃～150℃
Optional accessories: solenoid valve, positioner, limit switch,
pressure relief valve, air operated valve,
Fast drain valve, Lock up valve and so on.

产品展示
Product Show

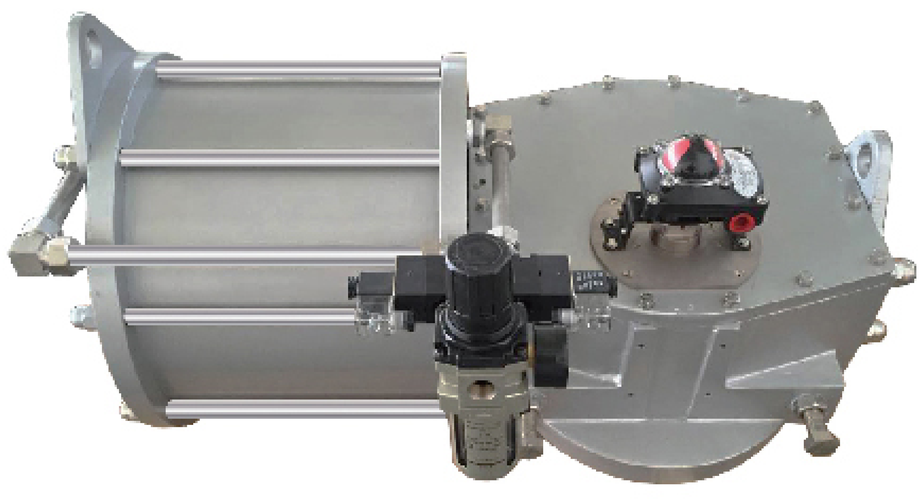

双作用气动执行器+附件
double acting pneumatic actuator + accessories

产品型号：DA系列
结构形式：对称拨叉式 倾斜拨叉式
工作气压：3～6Bar
缸径尺寸：200～1000mm
输出扭矩：600～96180N.m 超出可定制
行程范围：0～90° ±5°
箱体材质：球磨铸铁、铝合金
手动装置：液压手动、丝杆手动
工作温度：标准型：-20℃～80℃
低温型：-40℃～80℃
高温型：-20℃～150℃
附件选配：电磁阀、定位器、限位开关
减压阀、气控阀、快排阀、气锁阀等

Model: DA Series
Structure type: Symmetric Yoke Scotch Type, Canted Yoke Scotch Type
working air pressure：3～6Bar
Cylinder Diameter:200～1000mm can be customized
Output torque: 600～96180N.m can be customized
Stroke range: 0～90° ±5°
Body material:SG Iron、aluminium alloy
Manual device: Hydraulic manual、Screw manual
Working temperature: Standard： -20℃～80℃
Low temperature：-40℃～80℃
High temperature：-20℃～150℃
Optional accessories: solenoid valve, positioner, limit switch,
pressure relief valve, air operated valve,
Fast drain valve, Lock up valve and so on.

双作用气动执行器
double acting pneumatic actuator

产品型号：DA系列
结构形式：对称拨叉式 倾斜拨叉式
工作气压：3～6Bar
缸径尺寸：200～1000mm 可定制
输出扭矩：600～229000N.m 超出可定制
行程范围：0～90° ±5°
箱体材质：球磨铸铁、铝合金
手动装置：液压手动、丝杆手动
工作温度：标准型：-20℃～80℃
低温型：-40℃～80℃
高温型：-20℃～150℃
附件选配：电磁阀、定位器、限位开关
减压阀、气控阀、快排阀、气锁阀等

Model: DA Series
Structure type: Symmetric Yoke Scotch Type, Canted Yoke Scotch Type
working air pressure：3～6Bar
Cylinder Diameter:200～1000mm can be customized
Output torque: 600～229000N.m can be customized
Stroke range: 0～90° ±5°
Body material:SG Iron、aluminium alloy
Manual device:Hydraulic manual、Screw manual
Working temperature: Standard： -20℃～80℃
Low temperature：-40℃～80℃
High temperature：-20℃～150℃
Optional accessories: solenoid valve, positioner, limit switch,
pressure relief valve, air operated valve,
Fast drain valve, Lock up valve and so on.

产品展示
Product Show

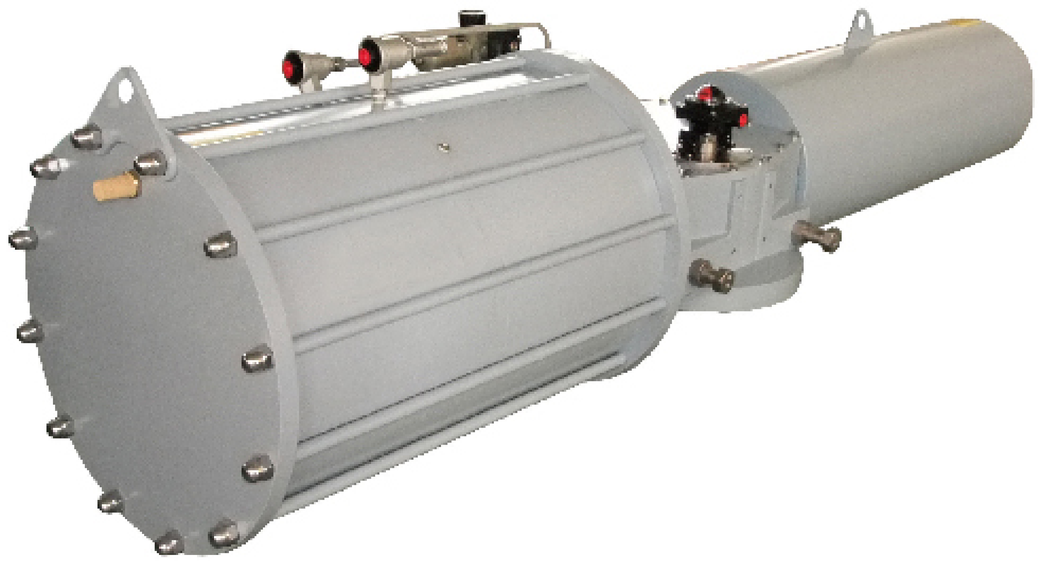

DRG结构非标双缸单作用气动执行器
DRG Structure double cylinder single action pneumatic actuator

产品型号：SSR系列
结构形式：对称拨叉式 倾斜拨叉式
工作气压：3～6Bar
缸径尺寸：200～1000mm 可定制
输出扭矩：600-192360N.m 超出可定制
行程范围：0～90° ±5°
箱体材质：球磨铸铁、铝合金
手动装置：液压手动、丝杆手动
工作温度：标准型：-20℃～80℃
低温型：-40℃～80℃
高温型：-20℃～150℃
附件选配：电磁阀、定位器、限位开关
减压阀、气控阀、快排阀、气锁阀等

Model: SSR Series
Structure type: Symmetric Yoke Scotch Type, Canted Yoke Scotch Type
working air pressure：3～6Bar
Cylinder Diameter:200～1000mm can be customized
Output torque: 600-192360N.m can be customized
Stroke range: 0～90° ±5°
Body material:SG Iron、aluminium alloy
Manual device: Hydraulic manual、Screw manual
Working temperature: Standard： -20℃～80℃
Low temperature：-40℃～80℃
High temperature：-20℃～150℃
Optional accessories: solenoid valve, positioner, limit switch,
pressure relief valve, air operated valve,
Fast drain valve, Lock up valve and so on.

单作用气动球阀
spring return pneumatic ball valve

产品型号：SR系列
结构形式：对称拨叉式 倾斜拨叉式
工作气压：3～6Bar
缸径尺寸：200～1000mm 可定制
输出扭矩：600～96180N.m 超出可定制
行程范围：0～90° ±5°
箱体材质：球磨铸铁、铝合金
手动装置：液压手动、丝杆手动
工作温度：标准型：-20℃～80℃
低温型：-40℃～80℃
高温型：-20℃～150℃
附件选配：电磁阀、定位器、限位开关
减压阀、气控阀、快排阀、气锁阀等

Model: SR Series
Structure type: Symmetric Yoke Scotch Type, Canted Yoke Scotch Type
working air pressure：3～6Bar
Cylinder Diameter:200～1000mm can be customized
Output torque: 600～96180N.m can be customized
Stroke range: 0～90° ±5°
Body material:SG Iron、aluminium alloy
Manual device: Hydraulic manual、Screw manual
Working temperature: Standard： -20℃～80℃
Low temperature：-40℃～80℃
High temperature：-20℃～150℃
Optional accessories: solenoid valve, positioner, limit switch,
pressure relief valve, air operated valve,
Fast drain valve, Lock up valve and so on.